RG-CAM30-S CAM30-T

copyright © 2023 ج ﻝ ﻡ

ﻭ [illegible] [illegible]

ج ﻝ ﻡ [illegible] ‗ p [illegible] [illegible] ف Φ

[illegible] ں ﺭ [illegible] [illegible] ﺭ [illegible] [illegible] 2 إ [illegible] [illegible] [illegible]

[illegible] ‰ ج ﻝ ﻡ [illegible] ج ﻝ ﻡ ‰

[illegible] [illegible] ‰ ├ ‰ ٠ ٥ [illegible]

ى [illegible] ﻩ ﻙ [illegible] ﺃ ₲ [illegible] ١ [illegible] ﻙ [illegible] [illegible] [illegible] ﻩ Î b

Ĵ [illegible]

گي ح ک

z ﻟ ﻣ ﻻ

z

z ﻟ ﻣ ﻳ ﺗ

z ج ﻟ ﻣ ﻟ 1 https://www.ruijie.com.cn

z ج ﻟ ﻣ ﻟ 1 v https://www.ruijie.com.cn/fw/

z ج ﻟ ﻣ 7*24h ﺃ ﺫ ﺩ https://ocs.ruijie.com.cn

z ج ﻟ ﻣ 7*24h ﻭ ﻭ 4008-111-000

z ج ﻟ ﻣ —— ج

2.

2 I
1 ⅵ 1
1.1 ⊏ ⅋ ▌ 1
1.2 ⅄ 3
1.2.1 ⸗ ⅄ 3
1.2.2 ⅂ 4
1.2.3 ⅄ 6
1.3 h‡ 7
2 ├ ° 7
3 ⊏ 8
3.1 ⊏ 8

HDM.....

1

RG-CAM30-T AF 42 °

RG-CAM30-S 95 ° 4K Sensor 4K

1.1

1-1

1-1

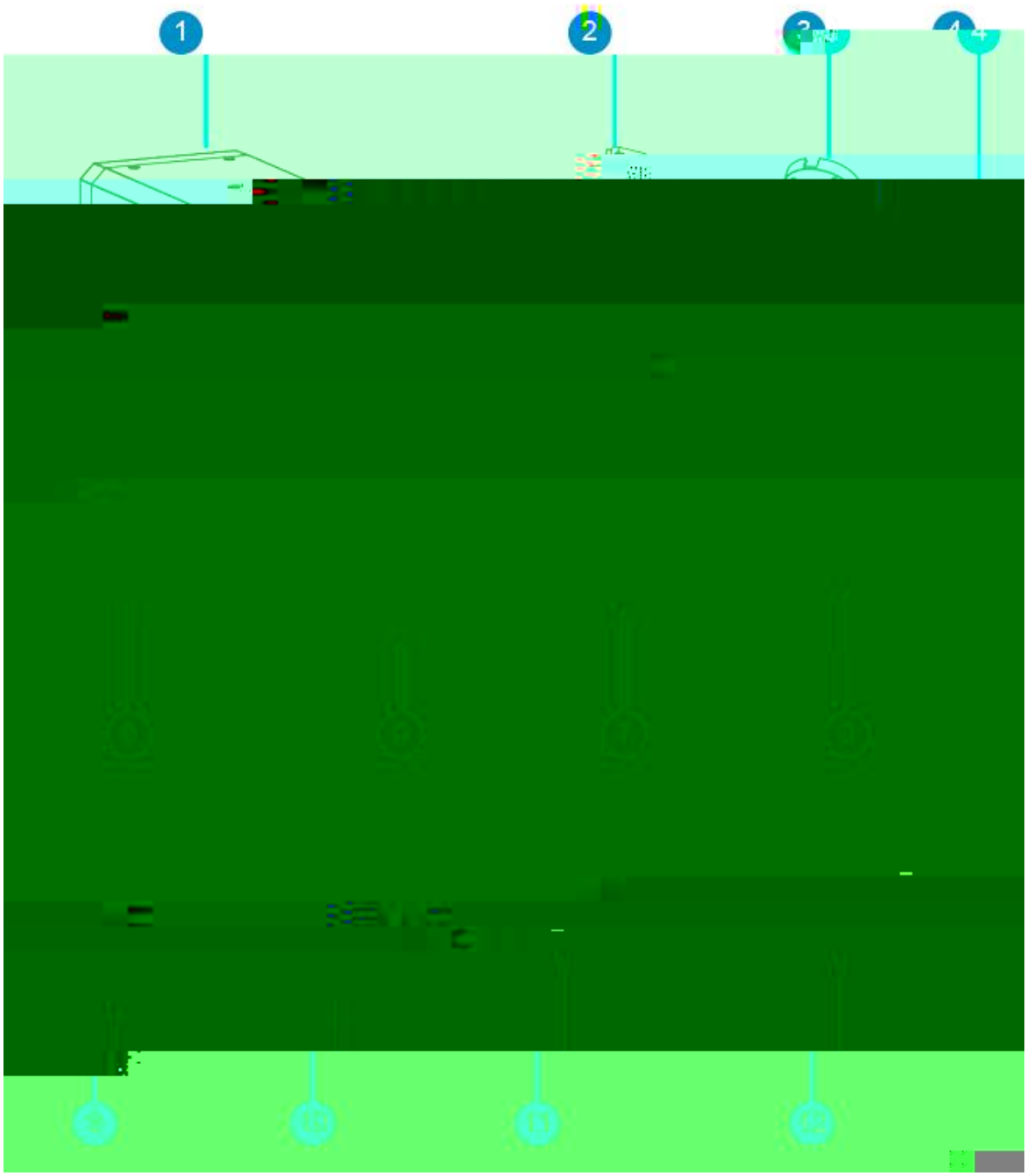

1.2

1.2.1

1-2

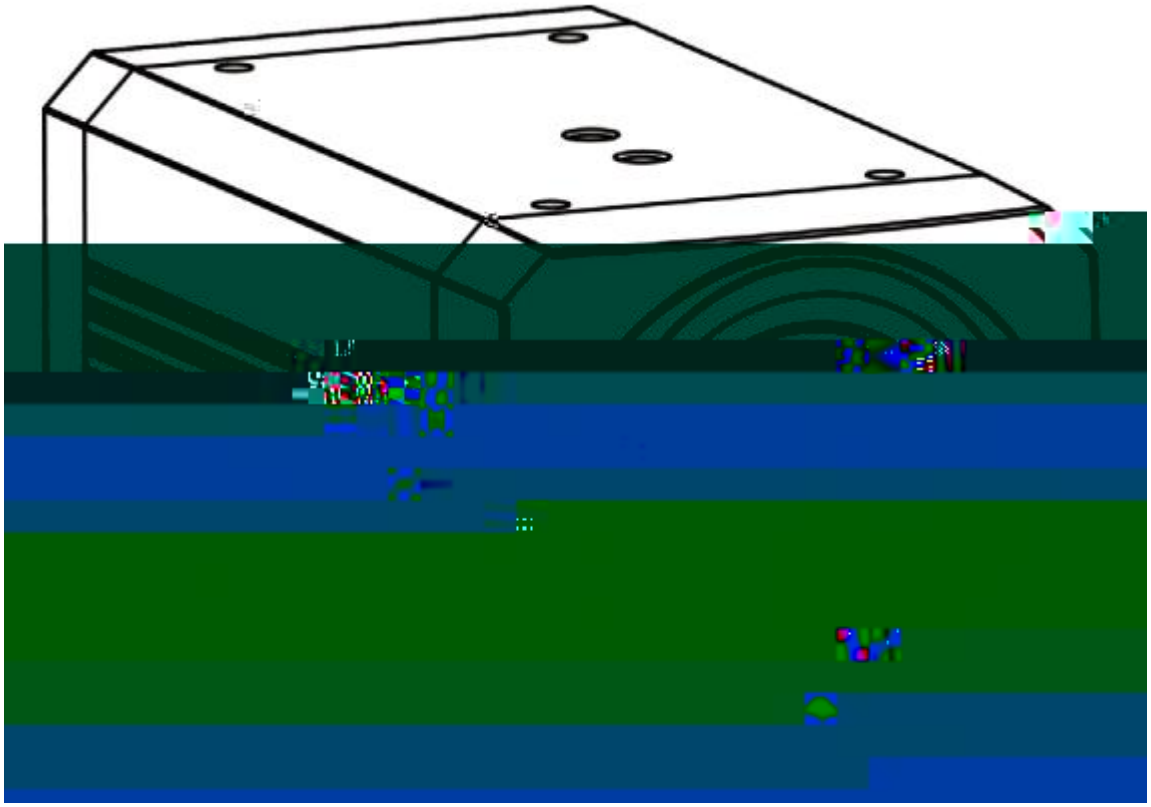

z AF ᴇ

42° ᴇ ᵹ # ᵻ ᵻ ᴌ ᵹ 95° ᴇ ´ ᵽ EPTZ

~ ▌

z ᴌ

ᴀ ᴇ ⅝ CMOS ᴗ ᴌ ᴏ ᵻ 2D 3D ᴗ ᴎ |

ᴗ ᴀ ᴌ ᵻ ᴇ ▌ ⅝ ᴇ 55dB

z ᵹ

SDI ᵹ ' ᵹ ᴇ 150 ᴎ 1080P25 SDI ᴎ ᴎ ᵺ ᵹ

z POC POE

POC Power Over Cable POE Power Over Ethernet ᵻ ᴗ ᴉ ᴐ ◊ ᴆ ᵻ ᴇ ᵻ

z ᴎ ₩

ᴊ SDI ᵹ ᵼ

1.2.2

1-3 **mm**

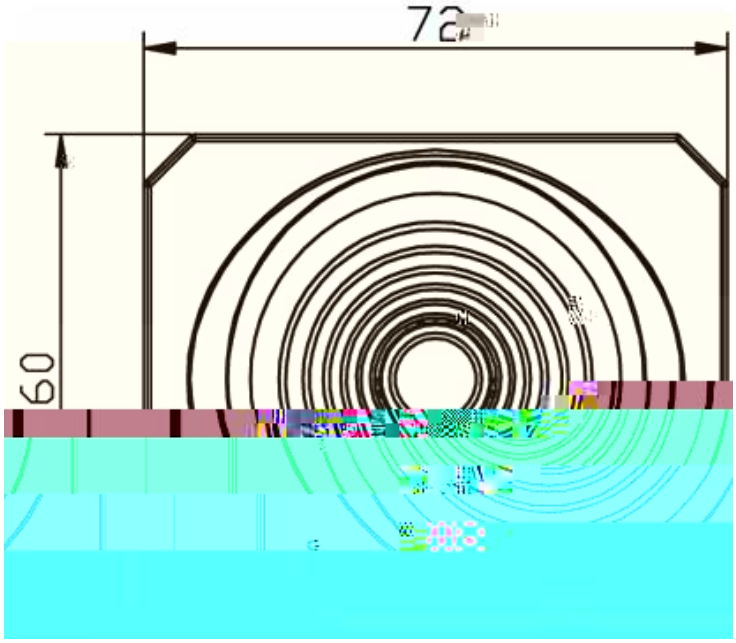

1-4

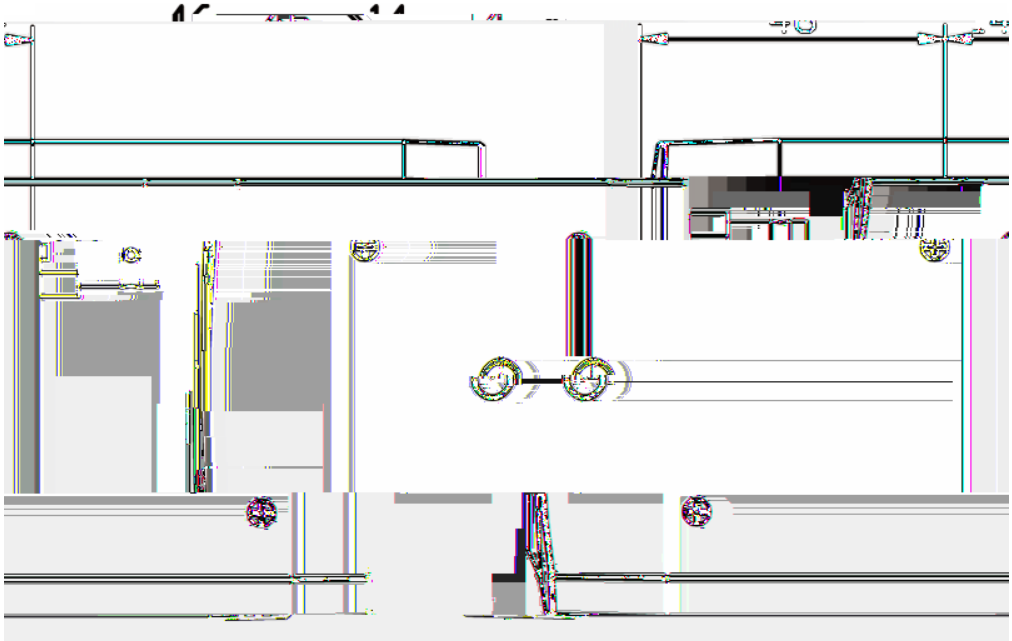

1-5

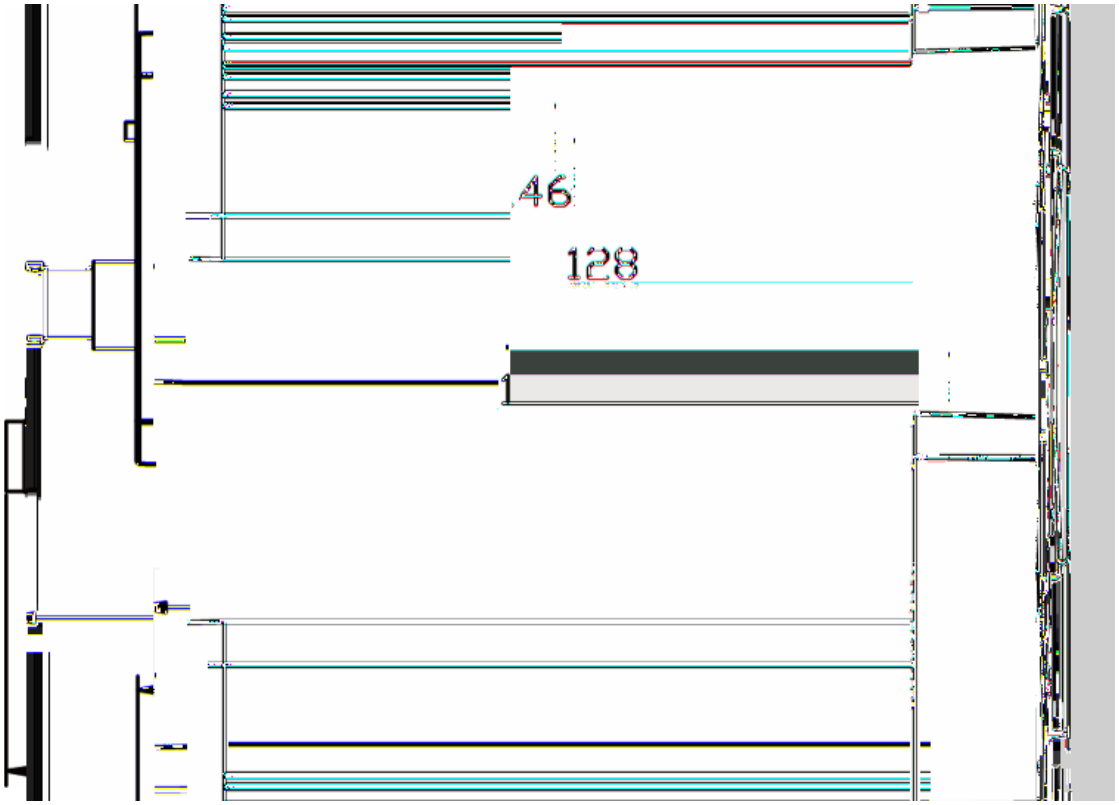

1.3

1-3

	RG-CAM30-T	RG-CAM30-S
	ٮ ٮ	ٮ
	846	
	3840*2160	
	25fps	
	42	95
	H.265/H.264/MJPEG ð ٮ ٮ	
	PoE IEEE802.3af ٮ ڼ ٮ	
	TCP/IP HTTP RTSP RTMP ONVIF DHCP ٮ	
	6W	
	DC 12V / PoE (IEEE1 253/83(0)-3(*2-3(.)11(3)-3(a)-3(f)]) TJETQEMC /P <</MCID 122	

2-1

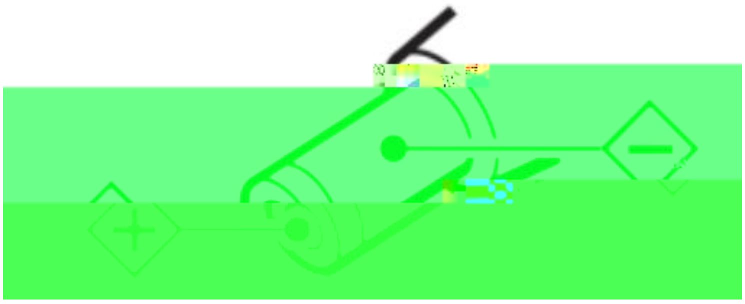

z

Ӌ ≛ ⇂ ⇂ Ŀ ت ĩ . ป Ŀ ت ٫ ͽ

z

ĩ 5 Φ ٨ ป ĩ 5 Φ ڂ

⚠ ⋕

(ÑQ‰° +k.ᵽ%73P§p4 >

3

3.1

Ŀ ت

3-1

ڤ	ڤ ˊ 6mm
	Ŀ PH2
ڨ ٧	‰ ᒪ ڤ ɹ
ˀ ɗ چ	Ŀ ‹
ٿ	. ŋ Ŀ ɹ

3.2

3-1

3.2.2

z ᴇ ᴊ ▯ ᴊ ' ᴊ ˍ 2.2-

xÀŽVp[illegible]F4B5PXÀž

3-2

3.2.3

2.1-2.4

Ñ Ь ᗌ ᗌ ᗌ ᗌ ᗌ 20~30° ᗌ ᗌ ᗌ ᗌ ᗌ

3-5

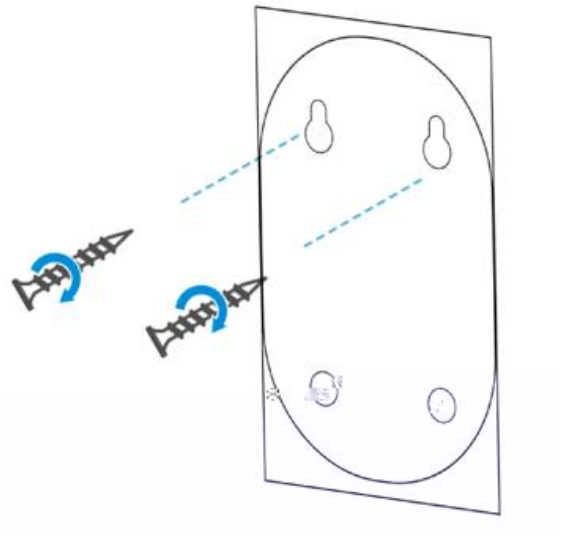

(3) ᵛ ᴈ 2 ᵓ ᴗ 4 ᵛ ᴇ

3-6

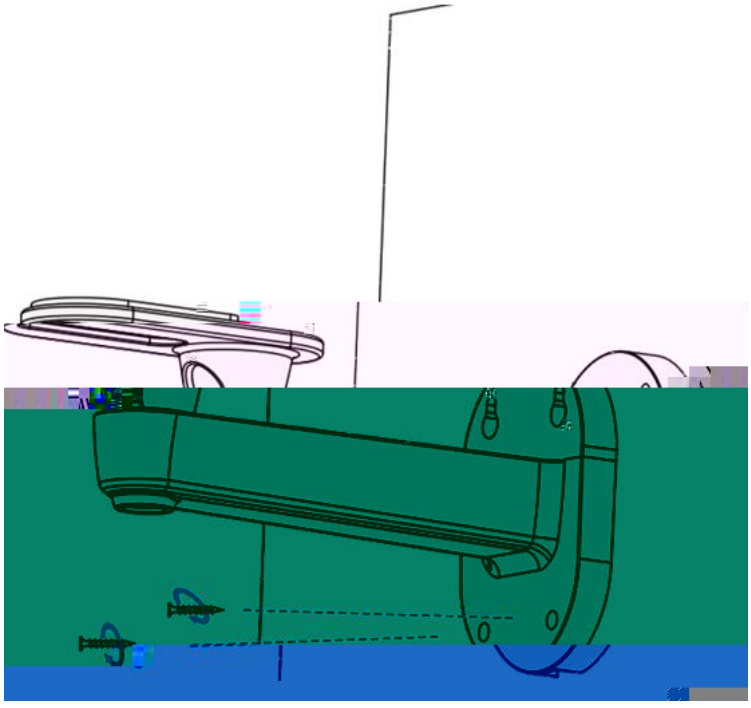

3.4.2

(1) ᵛ ᑕ ᴗ ᵊ ᵛ ᴗ

3-7

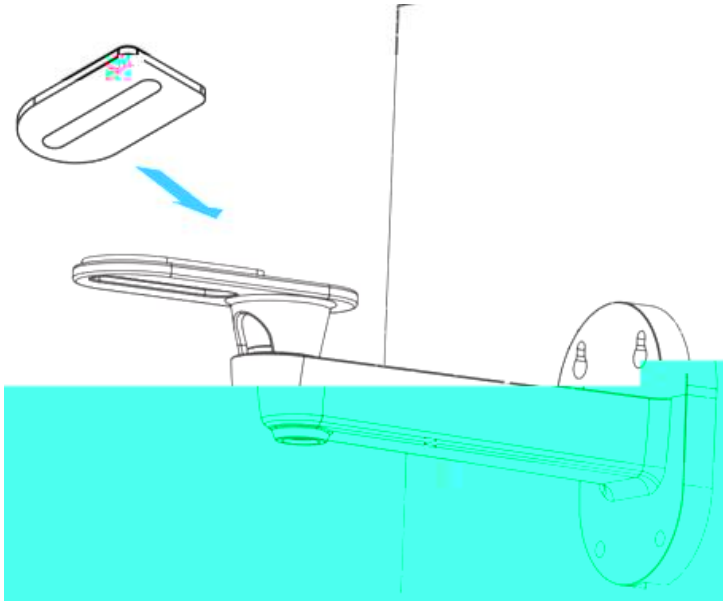

(2) ᵓ L — ᵘ OBJ ᴗ

3-8

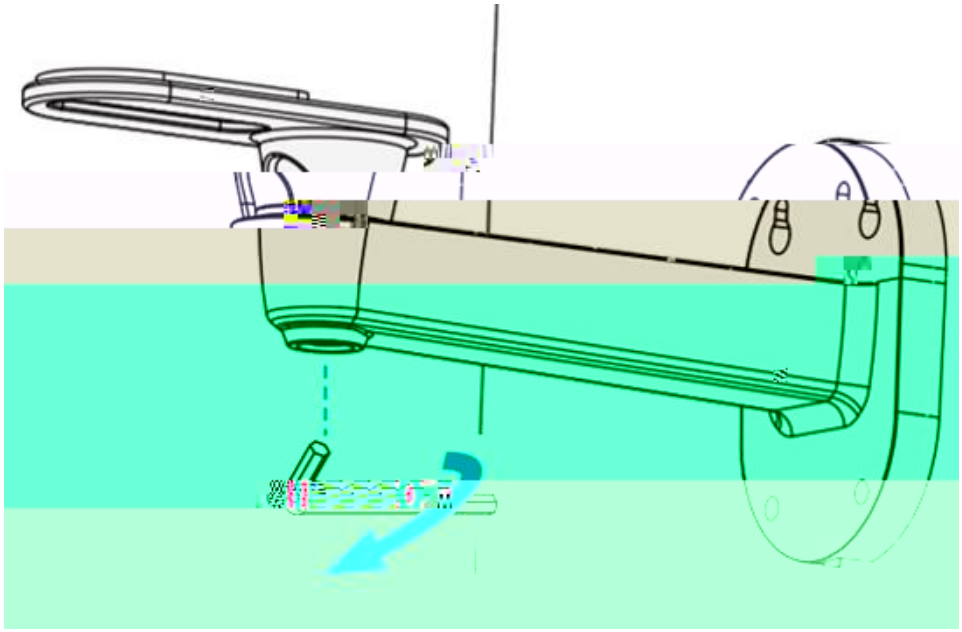

(3) ⅃ ᵘ

3-9

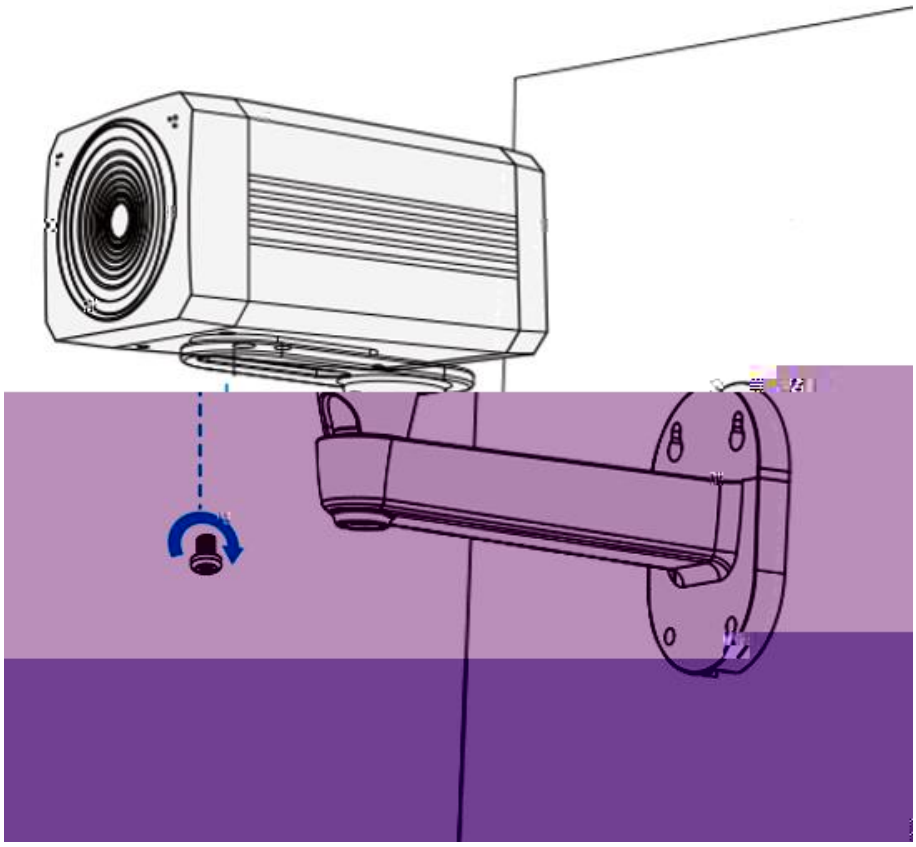

(4) ذ ل ل Ł

3-10

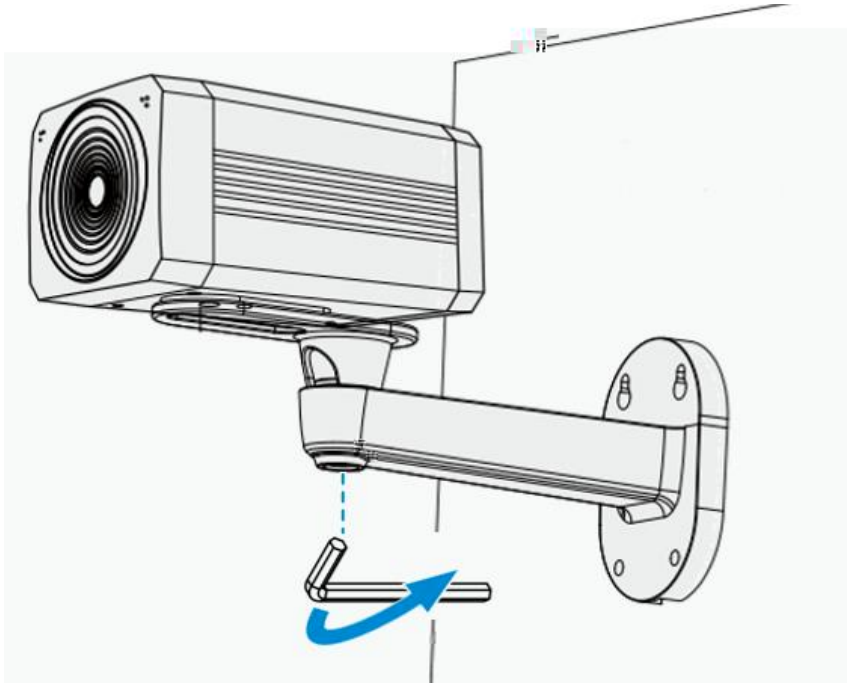

3.5

ᴉ ᴐ ᴐ ◊ ᴐ PoE ᴐ ᴐ ف

z ᴐ ◊ ᴐ ᴊ ᴊ ᴐ ◊ DC 12V

z PoE ᴐ PoE ⊕

ᴊ ᴊ ف ♂ ᴊ ᴠ ᴠ ~ ♂ ᵈ ♣ ~ ~ ف ᴛ ᴛ

4

4.1

ᴌ ᴉ ᴉ ᴉ PC ᴌ ᴉ ∂

z ᴊ ᴊ Windows 2000/2003/XP/Vista/7/8/10

z ᴊ ᴊ ᴉ TCP/IP

z ᴊ PC ᴉ ᴉ P4/128M RAM/40GHD ᴊ DirectX 8.0

z ⊨ ᴉ

Ñ IE ⊨ ᴉ H5 ᴉ ᴉ VLC ⊨ ᴉ ᴇ ᴉ ᴇ VLC ᴊ 1 http://www.videolan.org/vlc/

ᴉ ᴇ 32 VLC media player ᴉ ᴇ ᴇ ᴉ * ~

Ñ ᴌ ⊨ ᴉ H5 ᴉ ᴇ VLC

4.2 IP

ᴉ ᴉ IP ᴊ ᴊ ᴊ ᴇ ᴉ ᴌ ᴉ

ᴐ ᴐ PC ᴊ ᴊ ᴉ ᴉ ᴉ ᴉ ᴉ ف

z ᴐ ᴐ PC ᴉ ᴉ ᴉ ᴉ ف

z ᴐ ᴐ PC ف

4-1

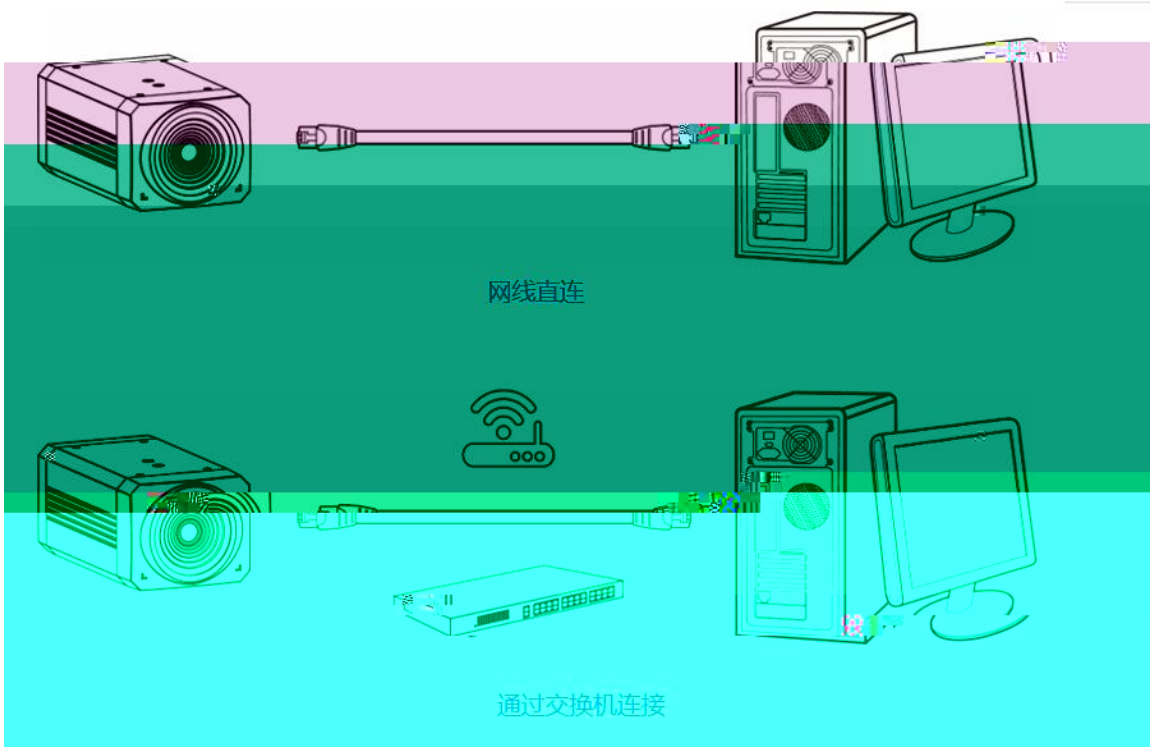

ᴛ ᴊ ᴗ ᴘ IP ᴊ ᴎ Webᴗ ᴊ ᴗ

z ᴊ ᴎ Webᴗ ᴊ ᴐ ᴕ PC ᴗ ᴓ ᴗ

a ᴐ ᴕ PC IP ᴊ ᴇ IP

- ᴓ IP ᴍ ᴎ IP 192.168.5.191

- ᴉ IP ᴍ ᴎ IP 192.168.5.163

b ᴇ ᴎ ᴜ ᴊ IP ᴉ admin ᴗ admin <` >

4-2

c <ᴊ ᴎ ᴗ ᴊ> ᴓ ᴊ ᴎ ᴘ ᴊ ᴗ ᴗ IP

d < ᴉ > ᴗ IPᴗ ᴊ ᴉ

4-3

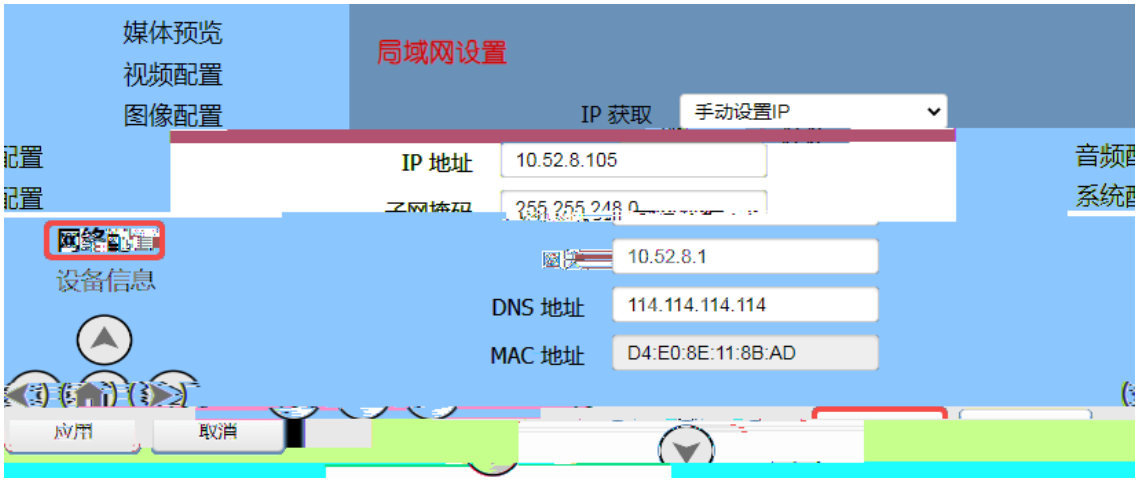

z ㄴ ب ɔ Ǜ PC ڼ ڼ ل ص ڼ ´ ʌ ف

a ɔ Ǜ PC ɔ ɛ ɟ ” ㄴ ب ث ˆ “ ɔ

b ڤ [ʌ] ˜ ˛ ʌ ˥ ɸ IP

c [ㄴ ب] ° ɸ ㄴ IP

d <ɸ ㄴ> ي IP ㄴ ب ㄱ

B*D

DDG5B- A5KF5‡ 9ɸ

4-4

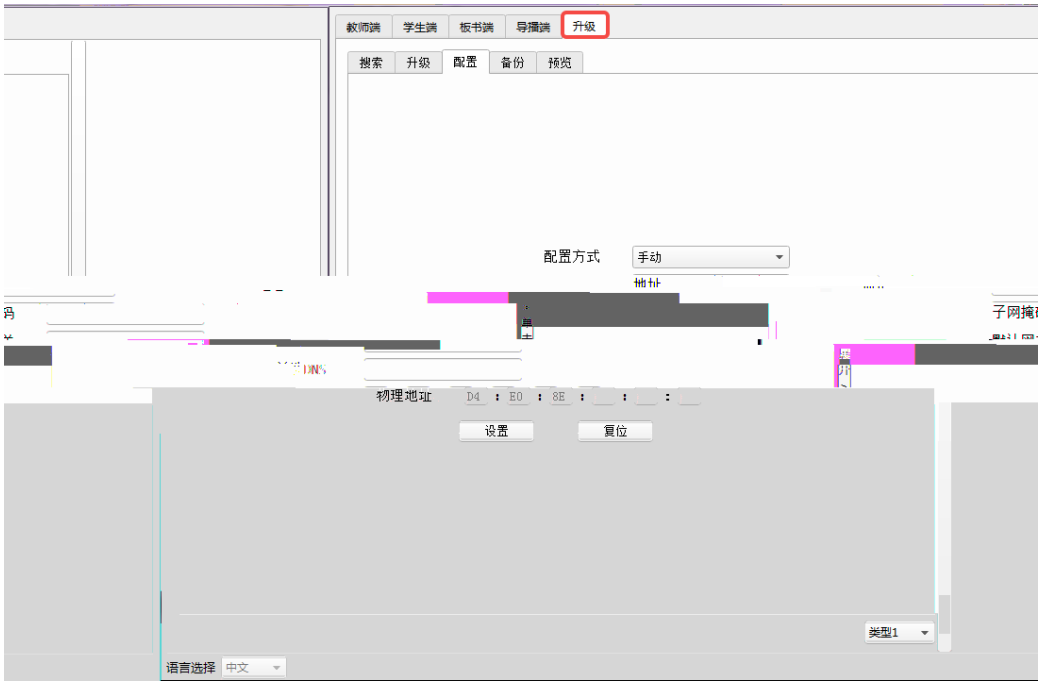

5

5.1

z ' ㄹ ㄱ ㄱ ⅞ ㄷ ㄱ ◊ ㄴ ㄱ ◊ ㄱ ㄴ

z ▌ㄴ ⃞ㄹ ㄱ ㄱ ㄷ ⃞ㄹ ㄱ ㄴ 6

z

	⎢ ن ص IE ⊨ η ᴌᴌ ᴅ IP Camera	● ᴛ PC ᴌ ᴎ ᴌᴌ ; ᴌ ᴎ ᴌ ᴀ* ᴎ ᴌ ᴏᴂ ᴠ ⅜ ᴅ PC ᴋ ᴌ ᴎ ᴛ ᴛ ᴎ ᴌ ᴛ ᴋ ´ ᴆ PC ᴀ ᴀ Ping ن ● ᴌ ᴎ ᴏᴂ ف ᴍ PC ف ᴠ ᴀ ᴨ ᴘ ᴌ IP ● ᴆ ᴏᴂ IP ᴌ . ᴌ ᴌ ᴌ * ● ᴆ MAC ᴌ ● ᴆ Web ᴎ ᴑ ᴌ ᴛ
	ᴌ IP ᴌ ᴌ ᴍ ᴀ .	● IP 192.168.5.191 ᴉ IP 192.168.5.163 ● ᴝ ᴎ ᴛ admin ᴝ ᴎ . admin